TECEsquare 9.240.810 – 9.240.812 + 9.240.647

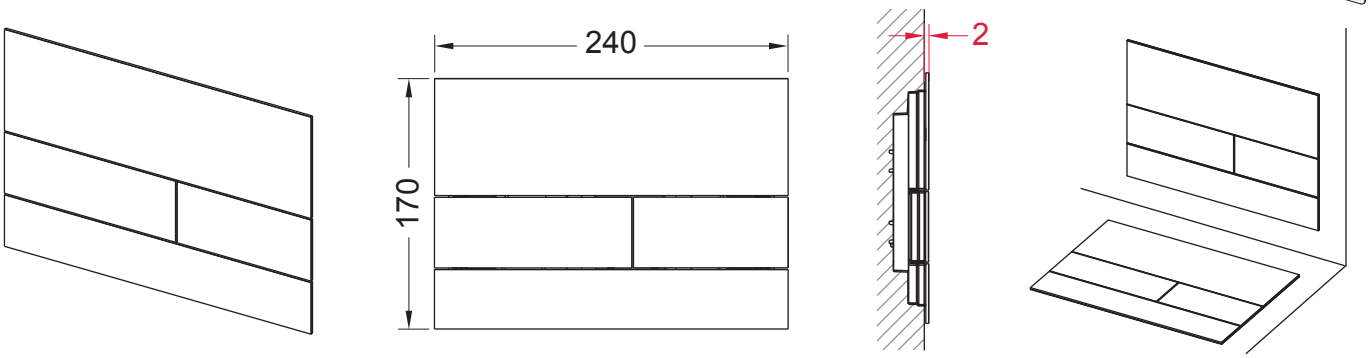

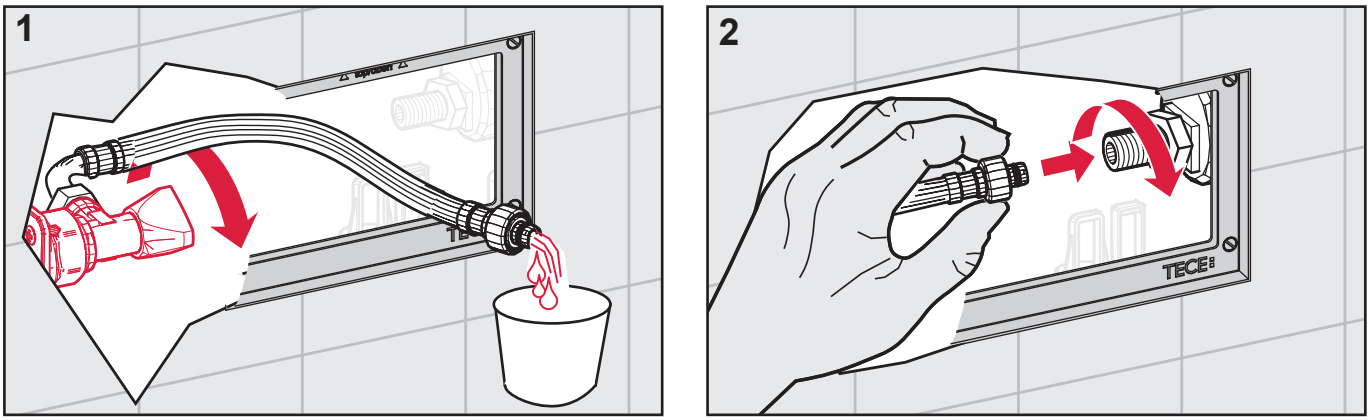

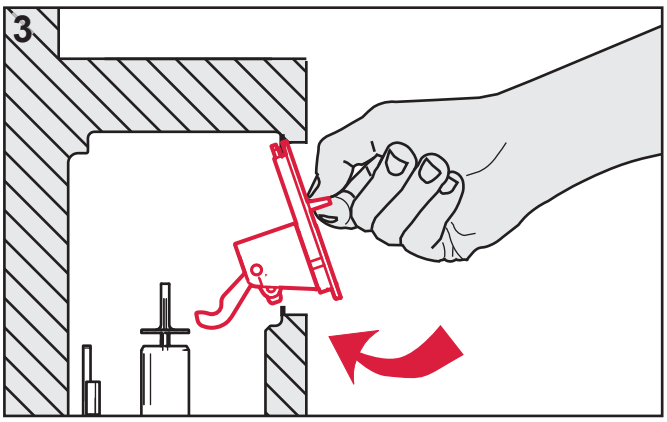

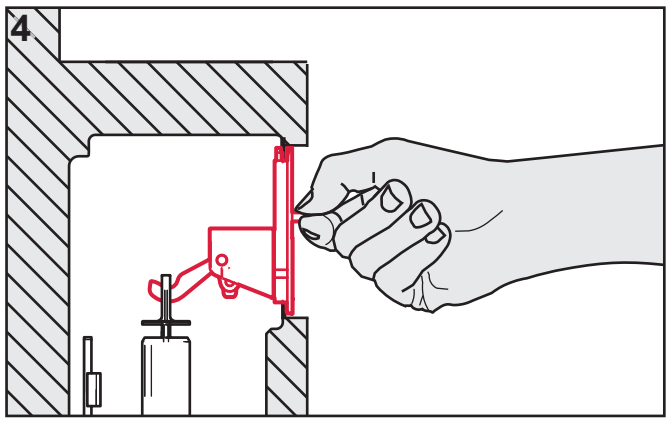

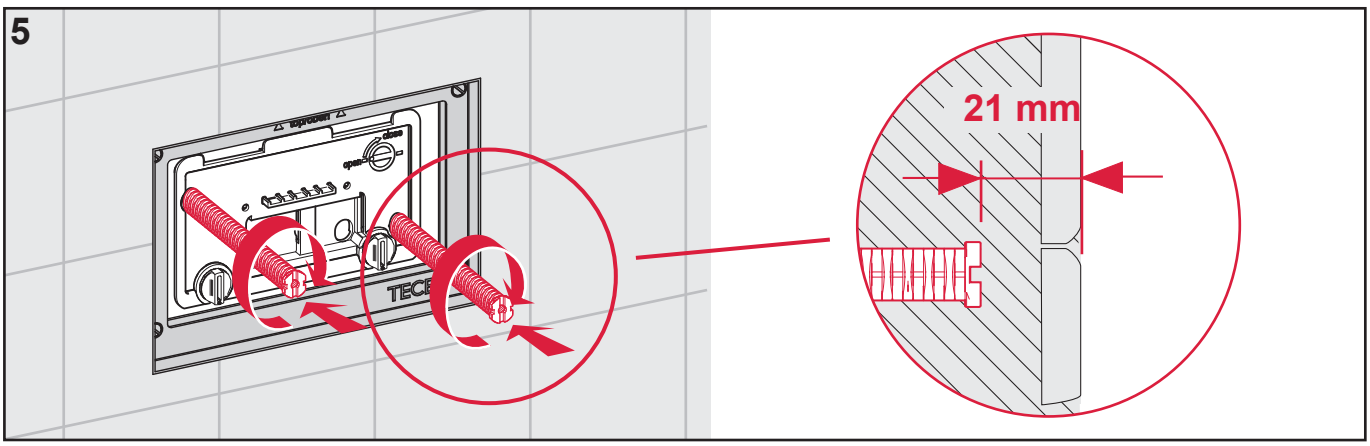

TECE

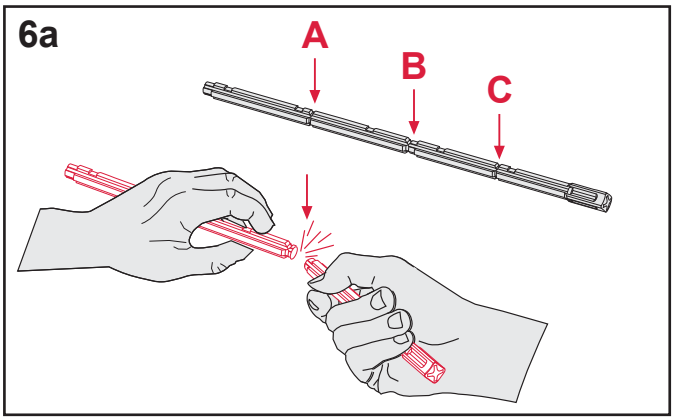

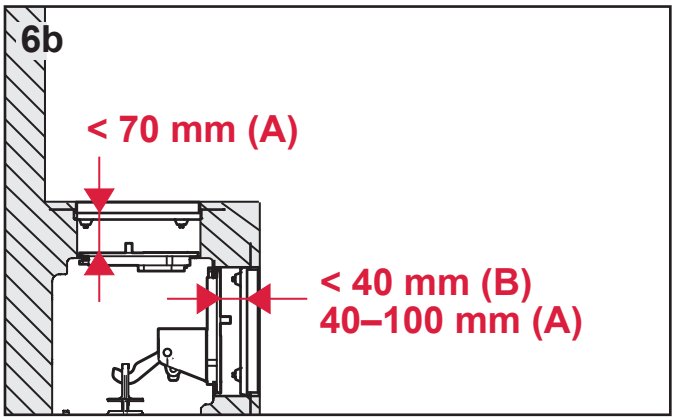

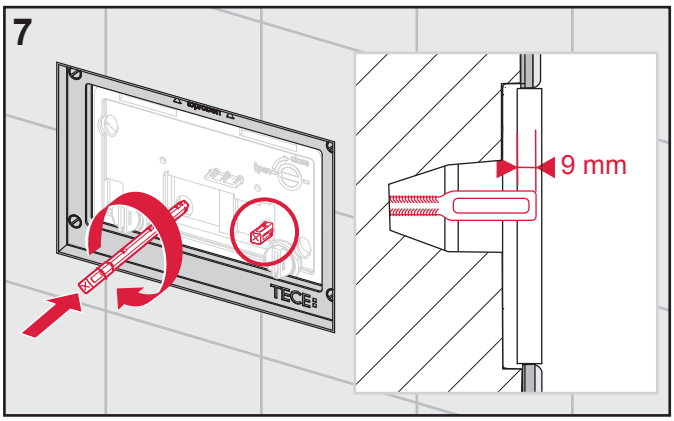

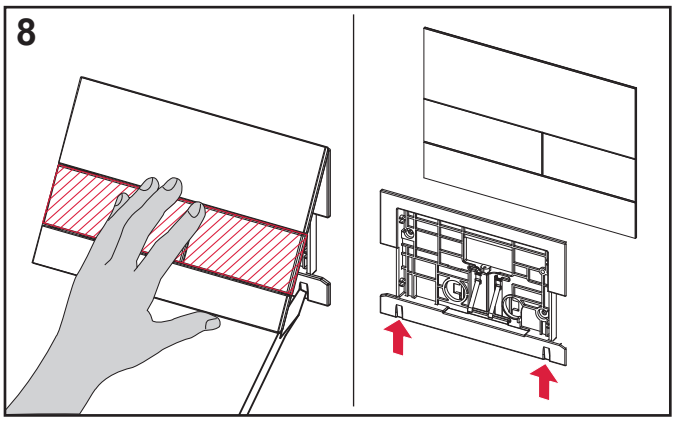

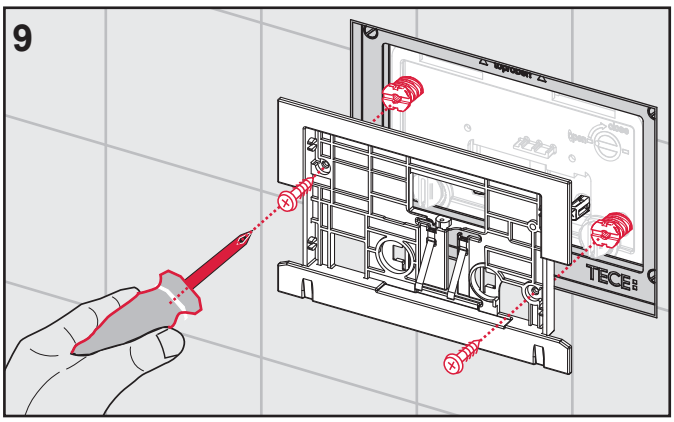

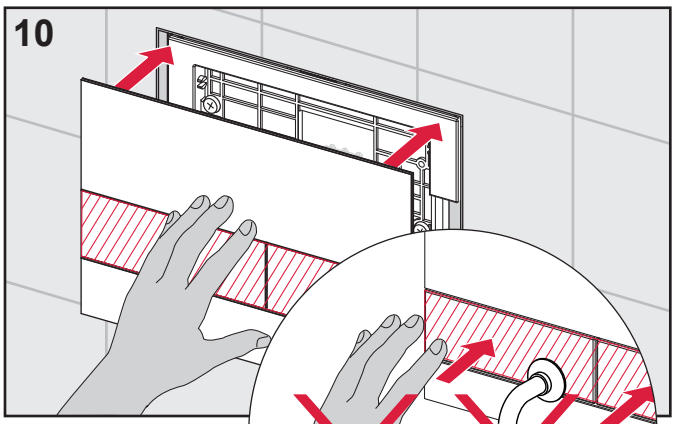

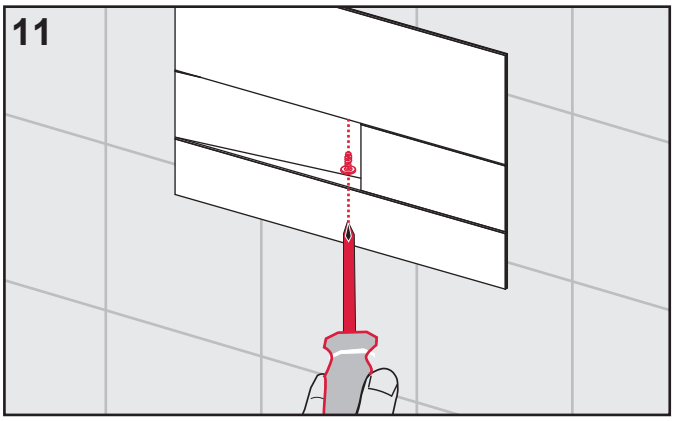

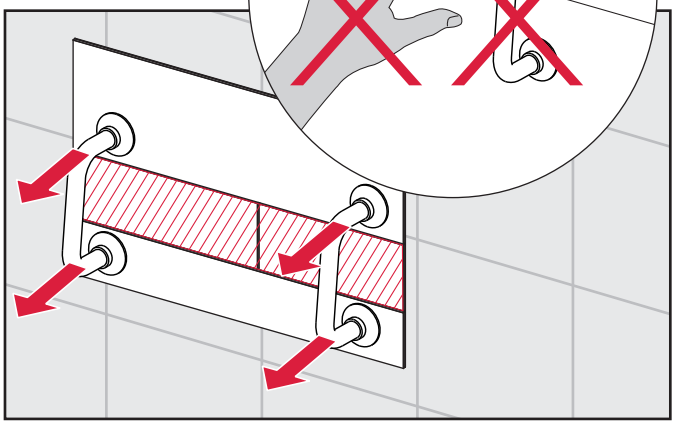

SP430 038 00 b

TECE