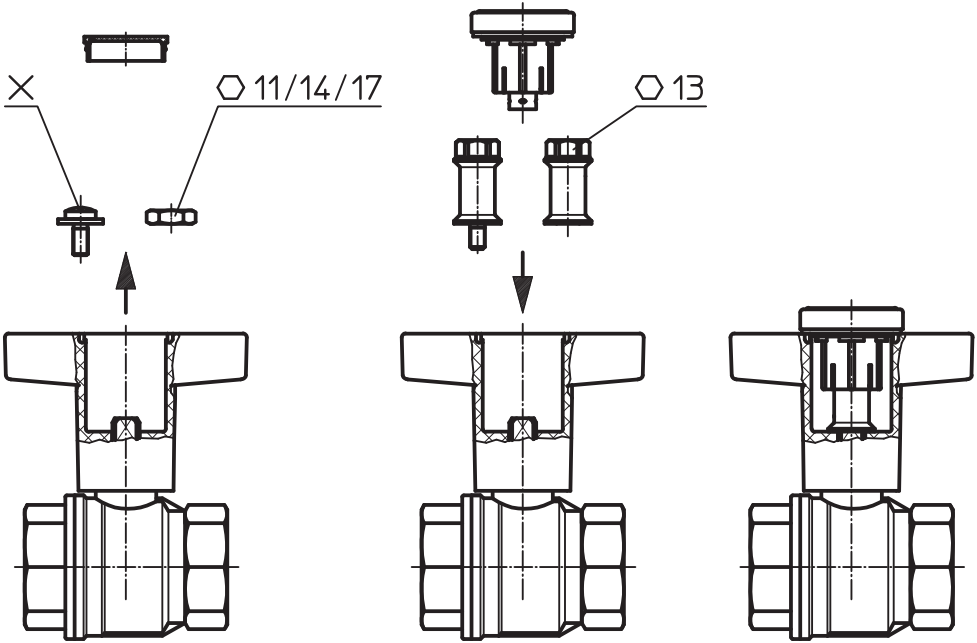
X
⬡ 11/14/17
⬡ 13