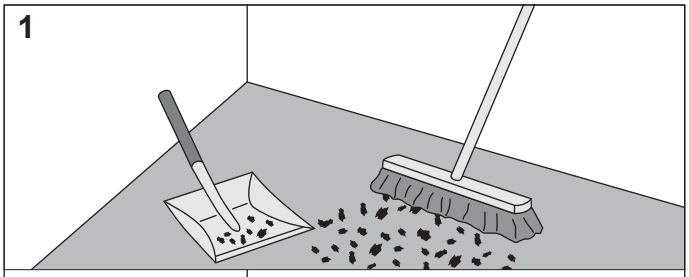
1

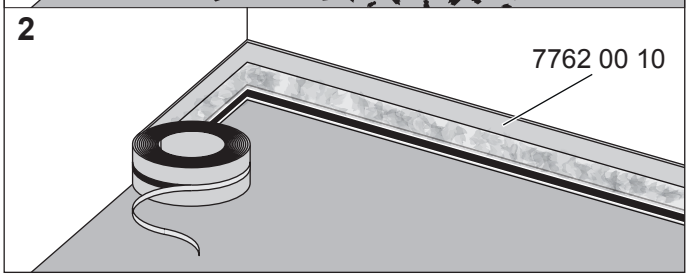
2
7762 00 10

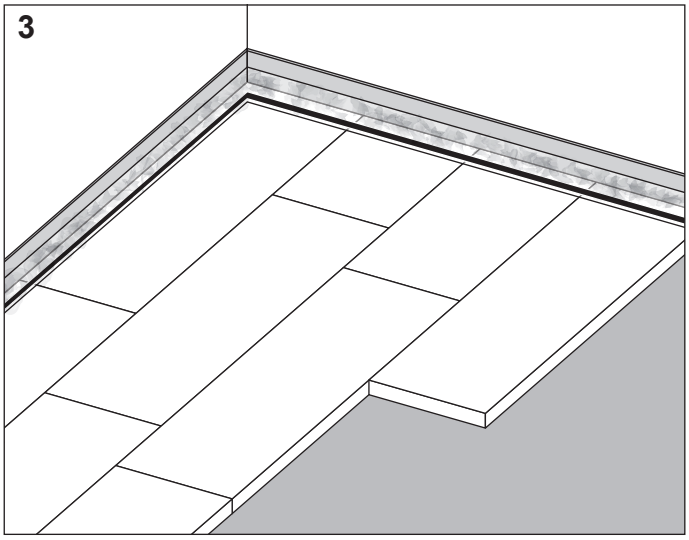
3

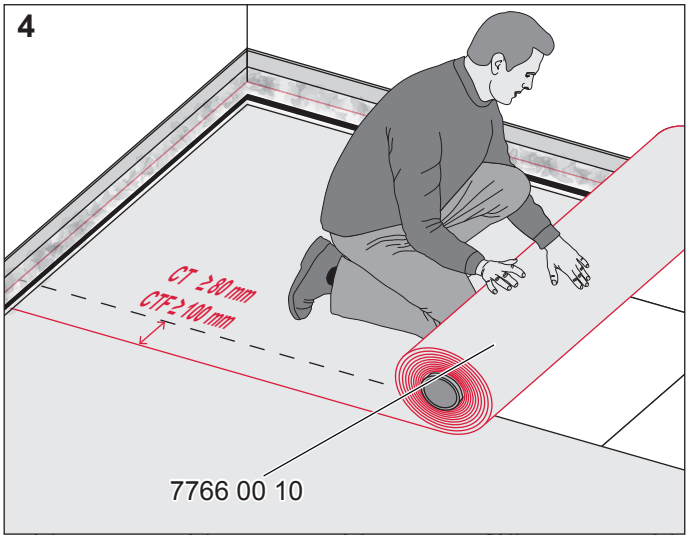
4
CT ≥ 80 mm
CTF ≥ 100 mm
7766 00 10

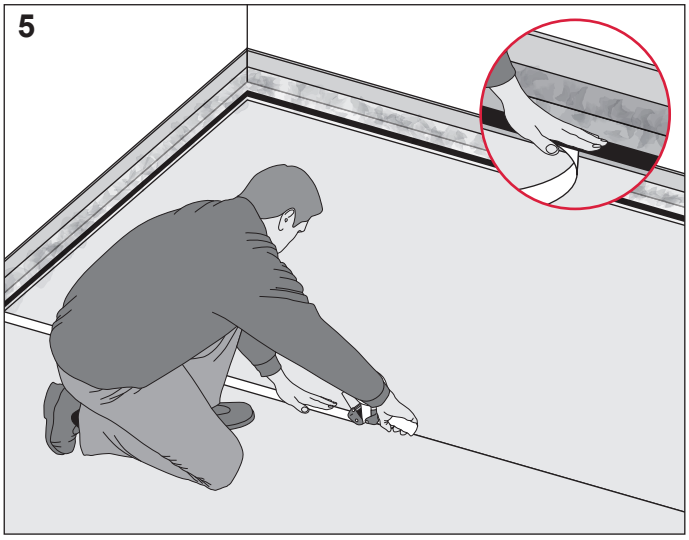
5

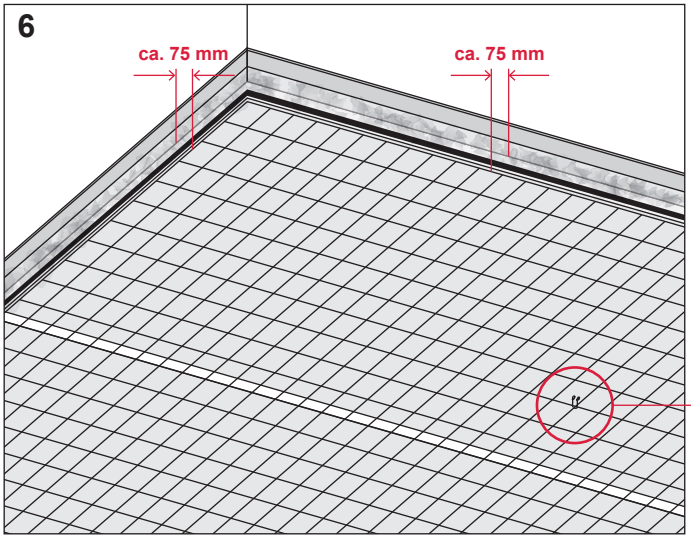
6
ca. 75 mm
ca. 75 mm

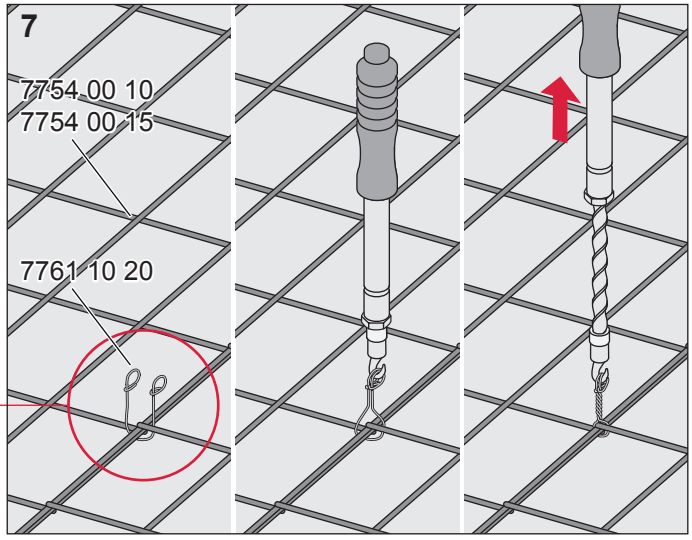
7
7754 00 10
7754 00 15
7761 10 20

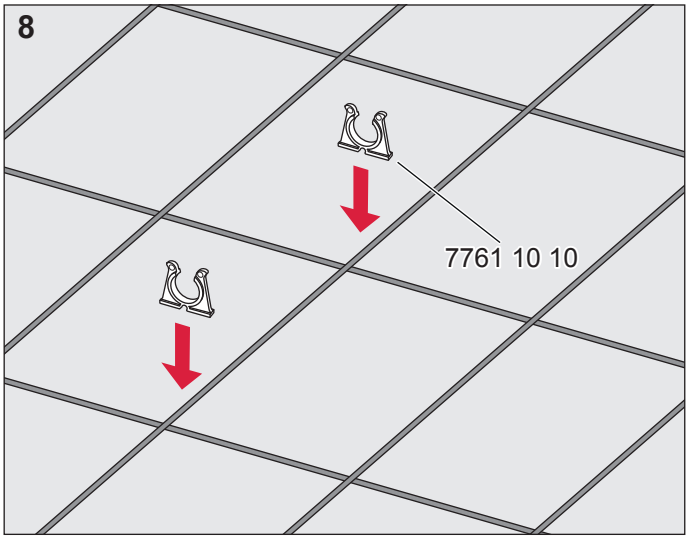

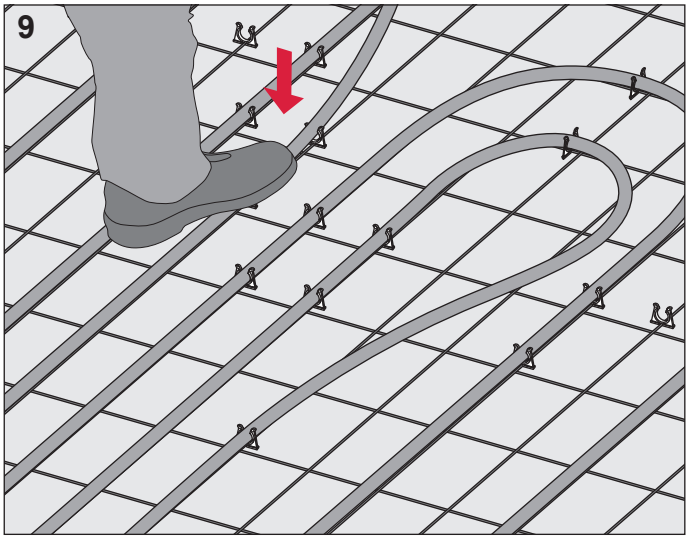

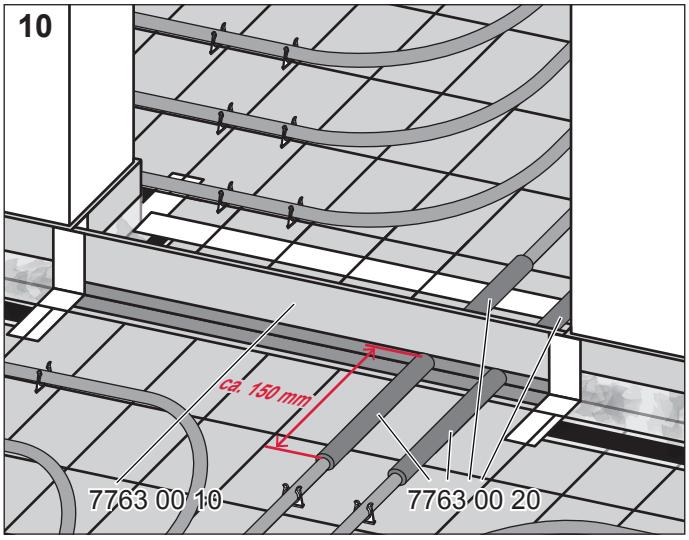

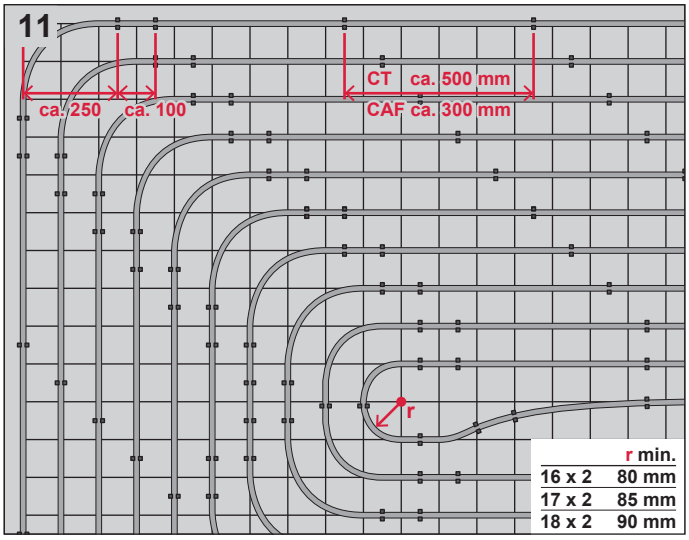

FL 230 011 00 a