ARTCERAM
ARTCERAM SRL
VIA MONSIGNOR TENDERINI SNC
01033 CIVITA CASTELLANA (VT) - ITALY
T. (+39) 0761 599499
F. (+39) 0761 514232
E. INFO@ARTCERAM.IT
W. WWW.ARTCERAM.IT

GHOST 65 | GHL002

Scasso consigliato
Recommended size of hole

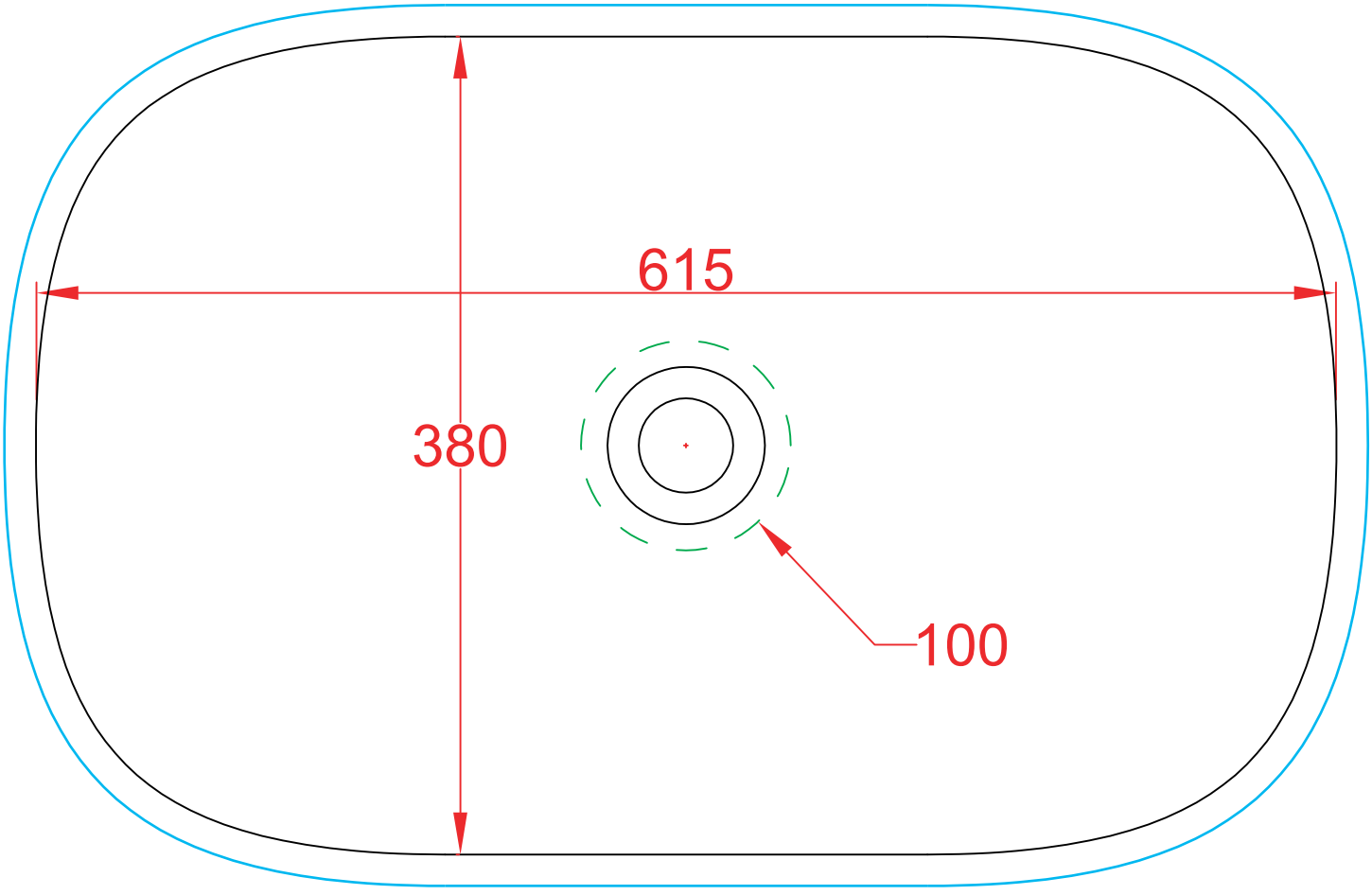

the.artceram made in Italy

Ingombro lavabo- Obstruction

Appoggio - Base

Scasso consigliato -Recommended size of hole